FASER S.A.®

We Serve Your Safety Needs

The Factory of Rescue Equipment
and Miner's Lamps
„FASER" S.A.

ul. Nakielska 42/44
42-600 Tarnowskie Góry
POLAND

www.faser.pl

Mining Industry | **For the army** | **Industry**

Self-contained closed-circuit oxygen breathing apparatus W-2000 type

CE 1437

The closed circuit apparatus W-2000 is designed for protecting the wearers breathing circuit when work is carried out in the irrespirable atmosphere, for example oxygen deficiency or toxic gasses after fires or explosions.

Easy assembly (without tools) due to modular design

Increased breathing safety- positive pressure in the apparatus system

Cooler decreasing temperature of the inhaled air

Better comfort of use- ergonomically-shaped carrier

The apparatus can be easily removed and replaced due to flexible hoses

Continuous pressure reading of the oxygen cylinder and checking of the apparatus operation at the same time due to Electronic Supervision System Readable display in ESN-2 which provides information on the time from the beginning of operation as well as reserve of pressure in the oxygen cylinder

Esser S.A.

CE 1437

Self-contained closed-circuit oxygen breathing apparatus W-2000 type – technical data

The closed circuit apparatus W-2000 is designed for protecting the wearers breathing circuit when work is carried out in the irrespirable atmosphere, for example oxygen deficiency or toxic gasses after fires or explosions.

Advantages:

- Simple operation – the modular construction of W-2000 enables its simple assembly, disassembly and cleaning after use, with most maintenance and servicing carried out without tools.
- Better comfort of breathing – positive pressure in the breathing system of the apparatus protects against accidental ingress of harmful substances from the outside environment entering the breathing circuit, use of ice cooler ensures a low inspired air temperature.
- Better comfort of use - with an ergonomically-shaped carrier and comfortable carrying straps, general comfort of use to the user is increased, flexible hoses ensure that the apparatus can be easily removed and replaced with the mask in place, to negotiate narrow areas or confined spaces.
- Better functional checking of apparatus - is achieved by the use of Electronic Supervision System ESN-2 which has been designed for continuous pressure reading of the oxygen cylinder coupled with simultaneous monitoring of the operation and supervision of the apparatus, safety use is increased due to the warning system, which begins operating when there is a terminal oxygen pressure left or the apparatus develops a problem.

Fesser S.A.

Self-contained closed-circuit oxygen breathing apparatus W-2000 type

Technical data:

Rated duration	up to 4 hours
Mass of complete apparatus	max. 14,5 kg
Overall dimensions (l x b x h)	440 x 185 x 580 mm
Capacity of oxygen cylinder	2 dm^3
Mass of ice cartridges	max. 1,1 kg
Working pressure	200 bar
Reduced oxygen pressure	$4^{\pm 0,1}$ bar
Oxygen flow (at 200 bar)	1,5 dm^3/min
By-pass flow at > 50 bar cylinder pressure	> 80 dm^3/min
Breathing resistance (at F=25 breaths/ minute and 2 liter per breath)	inhale > 0 mbar exhale < 7 mbar
Breathing bag capacity	6,5 dm^3
CO2 absorbent cartridge	one use cartridge or refillable (for training)
Electronic supervision system ESN-2	1 x alkaline battery 9V
EC Type Examination Certificate	**WE/S/632/2005 i WE/S/991/2007**
Compiles with the standard	**PN-EN 145:2000 (EN 145:1997)**

Esser S.A.®

The escape apparatus KA-60 type - technical data

CE 1437

The escape apparatus KA-60 type is designed for the protection of the wearer's airways during withdrawal (escape) from the area endangered by toxic gases harmful to health and from the area where the oxygen content in the atmosphere is insufficient for breathing. The escape apparatus KA-60 type is designed for the underground mining and other branches of industry. The apparatus can be applied in underground mine compartments, in non-methane and methane fields classified in "a", "b" and "c" categories of methane explosion hazard. The apparatus is designed for escape from the area endangered by fire, breakout or breakdown of chemical installation. The apparatus is disposable. The apparatus KA-60 type is designed only for escape purposes in an emergency a

Basic features of the apparatus:

- The KA-60 enables withdrawal from hazardous and toxic atmospheres within the period ot time greater than 60 minutes
- The operational duration at rest is in excess of 180 minutes
- The apparatus in service – maintenance free during the whole period of its usage
- The apparatus is equipped with the moisture indicator which shows the tightness of the KA-60 unit
- The unit is fitted with the heat exchanger which reduces the temperature of the inhaled air
- It is recommended to use the training unit TKA-60 to train a person with all the activities concerning the operation and usage of the escape apparatus KA-60
- The operation period is 5 years
- The protective cover is in set with the apparatus
- Activities during usage – neck carrying strap.

Conformity with Standard

PN-EN 13794:2005 (EN 13794:2002)

Esser S.A.

The escape apparatus KA-60 – technical data

Overall dimensions (length x width x thickness):	260 x 220 x 140 mm
Shelf life:	10 years from the date of manufacture and within the above period- the maximal time of 5 years after the unit is introduced into operation
Weight in use:	approx. 3,5 kg
Rated duration time:	at the volume flow rate 35 [l/min] - minimum 60 min at the volume flow rate 10 [l/min] - minimum 180 min
Temperature of usage:	-5 C ÷ +50 C
Relative humidity during usage:	≤ 100%
Marking „K”:	Self- contained closed circuit oxygen breathing apparatus, oxygen generating type (KO2)
Marking „S”:	Apparatus complies with the enclosure A to EN 13794:2002
Housing temperature in the area of contact with the user’s body:	~60 C
EC-Certyficate:	235/E-037/2008

The escape apparatus KA-60 – activities during usage

Activities during usage:

1. Place the apparatus on your chest. Open the apparatus by pulling the arm of the fastener upwards until it has parted and keep the apparatus with the other hand by using the carrying straps. Then, remove the top cover and throw it away. Observe the filling of the breathing bag. Opening of the apparatus also opens the valve of the oxygen cylinder.
2. Squeeze the breathing hose under the heat exchanger, take out the plug and put the mouth piece into mouth and make a deep exhalation into the apparatus.
3. Put the nose clip on your nose and make sure it tightly fits it.
4. Take off the helmet, put on the goggles and again put on the helmet.
5. Adjust the length of the carrying strap by pulling its ends downwards.
6. Fasten the waist strap and withdraw from the endangered area.

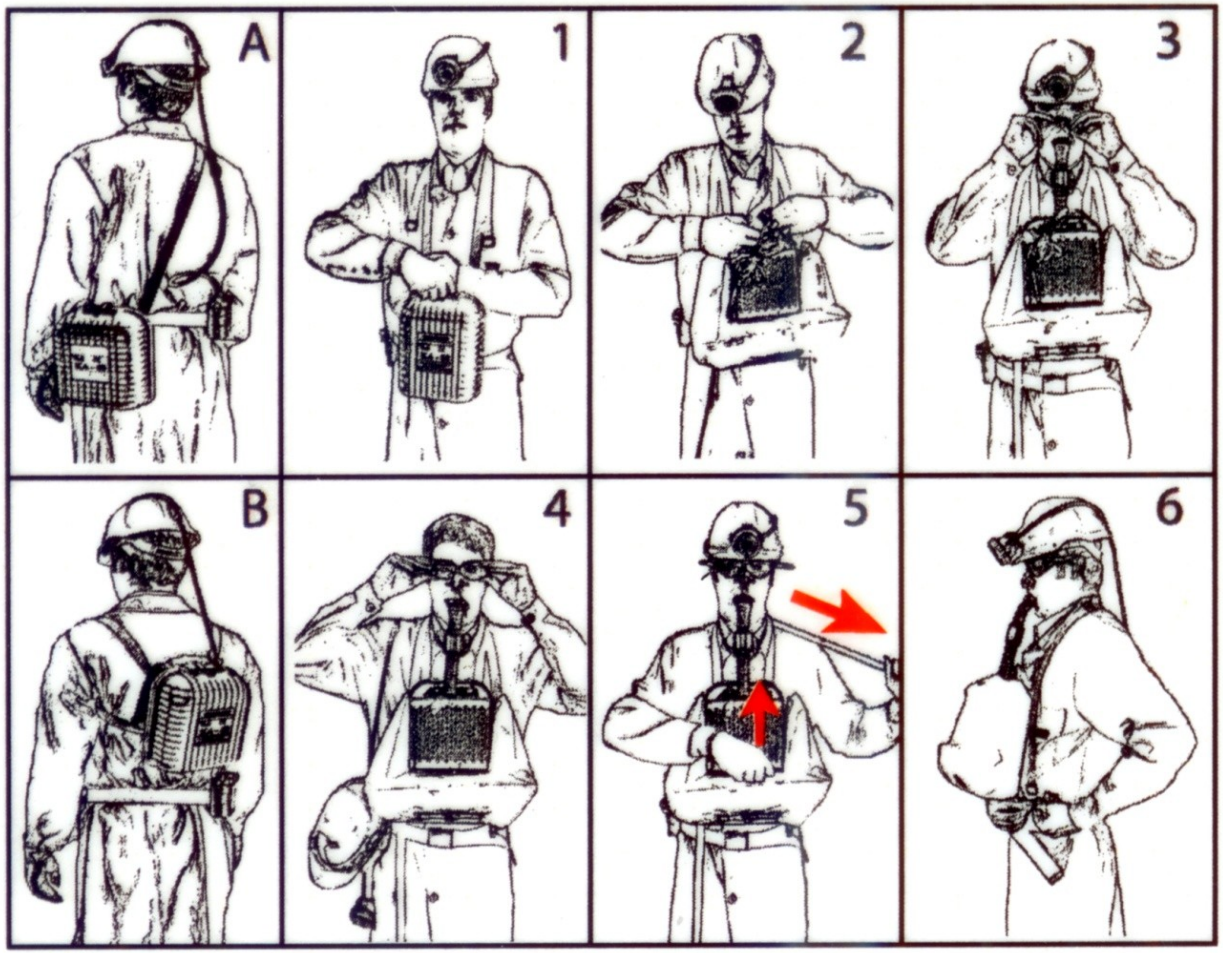

Fesser S.A.

The escape apparatus SR-K30A type

CE 1437

The SR-K30A chemical oxygen escape breathing apparatus is designed for respiratory protection during withdrawal (escape) from an area endangered by harmful / toxic gases or in atmosphere insufficient to breathe due to oxygen deficiency.

The self-rescuer is designed for underground mining and other branches of industry. It can be used in underground mines in „a", „b" and „c" zones, where there is a possibility of methane explosions as well as in surface mine facilities where potential explosive atmosphere of mine gas (methane) and/or coal dust could occur temporarily in general work conditions. It can be used for safe withdrawal from areas endangered by explosions, gas release or chemical installation breakdowns etc. The unit is designed for a single use. Such apparatus is for emergency escape purposes only, therefore must not be used for work or rescue purposes. The SR-K30 A apparatus is not designed to be used underwater!

Conformity with Standard

PN-EN 13794:2005 (EN 13794:2002)

Training unit
TSR-K30 type

Esser S.A.

The escape apparatus SR-K30 A type – technical data

Overall dimensions (length x width x thickness):	195 x 210 x 95 mm
Shelf life:	10 years from the date of manufacture and within the above period- the maximal time of 5 years after the unit is introduced into operation
Mass:	approx. 2 kg
Rated duration time	at a volume flow of 35l/min – minimum 30 minutes at a volume flow of 10l/min – minimum 90 minutes at a volume flow of 30l/min – minimum 45 minutes
Temperature of usage:	-5 C ÷ +50 C
Relative humidity during usage:	≤ 100%
Housing temperature in the area of contact with the user's body:	~60 C
Temperature of the apparatus surface (metal parts):	~95 C
Certificates:	WE/S/1600/2009
Marking „K":	Self- contained closed circuit oxygen breathing apparatus, oxygen generating type (KO2)
Marking „S":	Apparatus complies with the enclosure A to EN 13794:2002

Feser S.A.

Filter self-rescue POG-8M

CE 1297

Filter self-rescuer is a respiratory protective device designed for personal escape. The device protects the user against carbon monoxide during withdrawal from the endangererd underground mine compartments of mine areas with spreading fire.
Filter self-rescuer protects the user effectively against carbon monoxide when:

- oxygen content in the inhaled air is not lower than 17% by vol.
- carbon monoxide content in the inhaled air is not greater than 1,5% by vol.
- carbon dioxide content in the inhaled air is not greater than 2% by vol.
- content of hydrogen chloride, hydrogen sulfide, sulfur dioxide, nitric oxide does not exceed 0,05% by vol.

Technical data:

Operational duration at the air flow 30l/min, at carbon monoxide concentration of 0,25% by vol. and the relative humidity of 95-100%:	**60 minutes**
Weight of the complete self-rescuer:	**< 1,1 kg**
Weight of the self rescuer during usage:	< 0,6 kg
Overall dimensions (lenght x width x height):	about 105 x 95 x 145 mm
Maximal temperature of the inhaled air:	< 60 C
Inhalation resistance:	< 12 mbar
Exhalation resistance:	< 3,5 mbar
Shelf life:	**3,5 year from the date of production; 3 years after the unit was introduced into operation**, but no longer than its selflif
EC Type-Examination Certificate	**CE-PPE-B-00047-1297/05-SK**

The training in the scope of operation and usage should be performed by using the training filter self-resuer TPG-8.

The filter self rescuer POG-8M type complies with the standard EN 404:1994 – class FSR1A

Fesser S.A.

LN- LUNA cap lamp

LN-LUNA cap lamp can be used in underground excavations:

- which are not endangered by methane explosion in „a" explosion hazard zone,
- endangered by methane explosion in „b" or „c" explosion hazard zone,
- which are not endangered by coal dust explosion,
- of class A and B of coal dust explosion hazard .

It belongs to M1 category of equipment which can be used in an explosive atmoshpere.

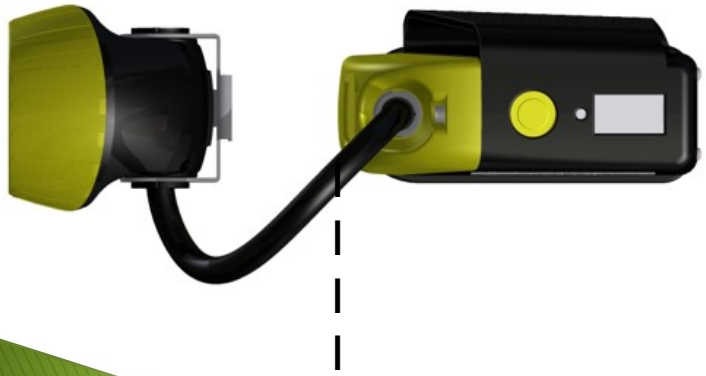

LN-LUNA cap lamp is designed to light the miner's workplace. It is fed by a maintenance free battery Li-ion. It is easy in operation and gives excellent illumination in different work situations. LN-LUNA cap lamp is equipped with location transmitter. Optionally it is possible to equip the lamp with radio transmitter which is used to track miners.

TECHNICAL DATA:

Lamp mass	0,97 kg
Rated voltage of battery	3,6 V (Li-ion)
Minimal lighting time for charged battery during guaranteed operating period:	
GLED (100 %).	10 h
GLED (20 %)	24 h
DLED	70 h
Emergency ALED	70 h
Maximum light intensity from 1 m distance	about 4500 lux
Angle of light distribution limitation	120 °
Ambient temperature	-5 ° C do + 40 °C
Construction mark	Ex I M1 Ex ia I Ma
Service life of light source	100 000 h
Overal dimensions of battery	117mm x 107mm x 57mm
Head diameter	66mm
Cable length	1400 mm lub 1500 mm
Housing protection degree	IP65
Minimal working time of transmitter	170 h
Maximum charging time of battery	max 6h
Possibility to work with transponders	
EC type examination certificate	FTZU 11 ATEX 0294X

Way of charging: multiple charging units type LUN-...
single charger ŁN-1.

Fesser S.A.

CL-01P cap lamp

CE 1453

CL-01P cap lamp :

- belongs to group I of equipment, category M1 with Ma protection level. It is used for work in underground mining facilities where there is a possibility of methane and/or coal dust explosion
- It can be used in Ex atmosphere
- CL-01P cap lamp belongs to group II, 2G category of equipment with Gb protection level. The lamp is designed for work in areas different from underground mine facilities endagered by gas, mist and liquids' vapour explosion of II B explosion group. It can be used in zone 1 and 2.
- It has explosion-proof construction and sparkproof design (level „ia")
- It is designed for maintenance free charging, easy in operation and gives excellent illumination in different work situations.

Types of lamps:

974*PK – lamp charged in dedicated charging units e.g. LUC-10 charging unit no 984 (10 stands) and Charging unit LUC-1 type

974*ZA – lamp charged by means of a single feeder

DATA:

Mass of lamp		<0,25 kg
Rated voltage of battery		3,7V (Li-ion)
Battery lifetime		500 cycles
Time of burning/ luminous intensity		
- main diode – full light		min. 10h / min. 2300Lx
- main diode –light at decreased brightness , gradual regulation 10% -90%		up to 240 h
- auxiliary diode in the lamp head		min. 70h / min. 3lx
Range of working temperature		-20° C to + 40 °C
Explosion-proof construction mark	M1 Ex ia I Ma IEC 60079-35-1	II 2G Ex ia IIB T4 Gb
Rated ampere-hour capacity of battery		min 2,1 Ah
Light sources		main and auxiliary diode
Number of light source positions (configurations)		3 and option
Service life of light source		100 000h
Overall dimensions		77x75x65 mm
Housing protection degree		IP65
Charging time		max 6h
Certificate of EC type examination		KDB 13ATEX0055X
Conformity with directives		94/9/WE (ATEX) i 2004/108/WE (EMC)
Way of charging:		multiple station charging unit LUC-10 or single feeder

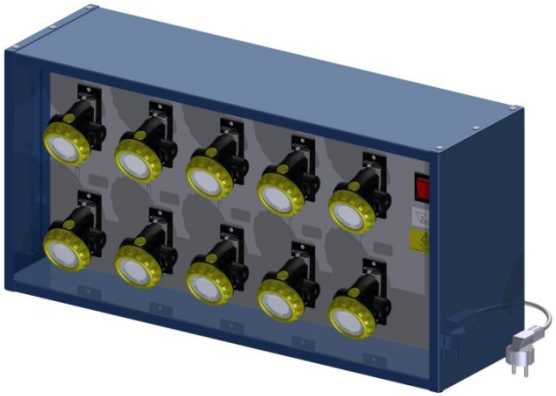

LUC-10 type
10 -stand charging unit

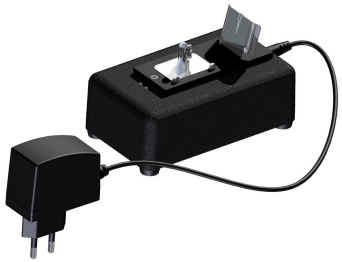

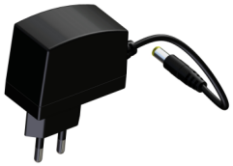

974E3K type single feeder

Charging unit LUC-1 type

Feser S.A.

CL-01P cap lamp

CE 1453

- It ensures 10 h of work at full intensity of lighting and 70 h by using auxiliary diode
- No need to buy and charge batteries
- LED diodes at high intensity used as light source
- Smooth regulation of lamp angle of depression
- It is the lightest cap lamp in our offer
- It is charged by means of a 10-stand charging units as well as by a feeder (so called cellular) depending on the lamp type
- It can be used in zone 1 and 2
- It is made of a durable and resistant material
- The user can program light source intensity in lighting position no. 2
- Additional/ optional equipment ensures fixing the lamp to the helmet and regulation in carrying the lamp on helmets without the clip or as a forefront version.

Additional equipment

Additional equipment – draw. 974E6K Inflexible lamp mounting on the helmet with a clip „Górnik" type B
Additional equipment– draw. 974E7K 974B47K head belts with catches designed to mount the lamp on helmets without clips
Head belts – draw. 974B47K Carrying the lamp as a forefront version.

Feser S.A.

LN-IZA Cap Lamp

CE 1453

LI-IZA cap lamp falls into group I, category M1 of equipment which is designed for continous work in underground and surface mines when there is a possibility of methane explosions, as well as in surface mines and confined space work where potential explosive atmosphere of mine gas (methane) and/or coal dust can occur temporarily in general work conditions. It belongs to group III, category 2G of equipment which is designed for continuous work in 1 and 2 zones endangered by gases, vapor and mist of group IIB. The lamp has explosion-proof construction and is Certified Intrinsically Safe performance (device “i”). The cap lamp is designed for maintenance free charging, ease of operation, and gives excellent illumination in different work situations.

Esser S.A.

LN-IZA Cap Lamp – technical data

Technical data:

Parameter / Type of lamp	938/1*GL	938/1*ND
Mass of lamp	< 0,95 kg	< 0,9 kg
Rated voltage of battery	3,6V (3 x Ni-MH 1,2V)	
Time of burning / luminous intensity - diode LED – full light 100% - diode LED – light at decreased brightness - auxiliary light source in the lamp head	 min. 12h / min. 3000lx min. 18h / min. 1300lx min. 30h / min. 3lx	 min. 16h / min. 3000lx min. 24h / min. 1300lx min. 30h / min. 3lx
Range of working temperature	-5 C ÷ +40 C	-20 C ÷ +40 C
Location transmitter	GLON5S LOK5S	----------
Duration of location transmitter	min. 170h	----------
Explosion-proof construction mark	**Ex I Ma**	**Ex II 2G Ex ia IIB T4 Gb**

GL (LO) – cover with GLOK (LOK) location transmiter and auxiliary light source
ND – standard cover with auxiliary light source
NS – standard cover without auxiliary light source

- Rated ampere-hour capacity of battery: min. 4,0 Ah
- **Rated duration (number of charging /discharging cycles): min. 800 cycles**
- **Light source : main light source in the lamp head and auxiliary light source in the lamp head and in the battery cover**
- Number of light source positions: 3
- **Light source life: 100 000h**
- Overall dimensions (l x b x h) of battery: 115 x 46 x 93 mm
- Range of the cable length: 1100 1600 mm (standard 1400 mm)
- Housing protection degree: IP 65
- Over-current protection: fuse WBO-1,6A
- **Charging time: max. 6h**
- **Certificate of EC type examination: KDB 09 ATEX130X**
- **Certificates: 94/9/WE (ATEX) i 2004/108/WE (EMC)**
- **Charging**: multiple station charging units LLK-102, LLK-51, LLK-20, LLKS-136, LLKS-102, LLKS-51, LU-5 or single station charging units LU-1

Elser S.A.

Signal lamp LS-04

CE 1453

Signal lamp LS-04 falls into group I, category M1 of equipment which is designed for continous work in underground mines and sufrace facilities with a possibility of methane explosions, as well as in surface mine facilities and confined space work where potential explosive atmosphere of mine gas (methane) and/or coal dust can occur temporarily in general work conditions. Falls into group III, category 2G of equipment which is designed for continuous work in 1 and 2 zones endangered by gases, vapor and mist of group IIB.
It is a warning device adjusted to work with position casings OP-1 which are used to indicate the end of mine trains.

Major advantages:

- Spark-proof design (level „i_a")
- Maintenance free, gasproof, battery Ni-MH (so called „hydrogen")
- High capacity lighting achieved owing to LED diode system with high intensity luminosity
- Battery might be carried on the belt

Elser® S.A.

Signal lamp LS-04 – technical data

Mass of lamp	max. 0,9 kg
Time of burning	min. 16 h
White diode luminous intensity	min. 1500 lx
Explosion-proof construction feature:	**I M1 EX ia I** **II 2G EX ia IIB 120 C (T4)**
Rated voltage of battery:	3,6V (3 x Ni-MH 1,2V)
Rated ampere-hour capacity of battery:	min. 4,0 Ah
Rated duration (number of charging /discharging cycles):	**min. 800 cycles**
Charging time :	**max. 6h**
Light source:	**1 white LED diode and 12 red diodes**
Light source life:	**100 000 h**
Overall dimensions (l x b x h) of battery:	140 x 61 x 55 mm
Range of the cable length:	500 - 1600 mm (standard 600 mm)
Housing protection degree:	IP 65 / IP 67
Over-current protection:	fuse WBO-1,6A
Range of working temperature:	-20 C ÷ +40 C
Certificate of EC type examination:	**KDB 10 ATEX 100X**
Certificates:	**94/9/WE (ATEX) i 2004/108/WE (EMC)**
Charging: station charging	multiple station charging units or single units

The Factory od Rescue Equipment and Miner's Lamps „FASER" S.A.
ul. Nakielska 42/44, 42-600 Tarnowskie Góry - POLAND
tel. +48 (32) 208 07 77; fax. +48 (32) 285 34 13
e-mail: faser@faser.com.pl http://www.faser.pl

Charging unit LU-1 type

Charging unit LU-1 is a universal charging unit designed to charge cap lamp and signal lamp batteries produced by FASER S.A. which are equipped with Ni-MH batteries at rated voltage 3,6V. The charging unit (depending on the programme version) is designed to charge lamps LN-04, LN-IZA, LG-3MH and LS-04 type. Electronic system of the charging unit controls stage of battery charging by means of microprocessor system. Visual displays which are based on LED diodes inform the user about the stage of operation, i.e. charging, lamp ready for use, defect.

Parameter / No	941/1*06H
Application (designed to charge cap lamps type)	LN-IZA LN-04 LS-04
Number of charging stands	1
Supply voltage	AC 100-240 V 50/60 Hz
Consumption of power	max. 12 W
Type of charging	Constant current charging
Mass	max. 0,3 kg
Time of charging	max. 6h
Working temperature	-5 C +60 C
Overall dimensions (l x b x h)	120 x 70 x 73 mm
Allowable humidity	96%
Accordance with directives	2004/108/WE (Directive EMC)

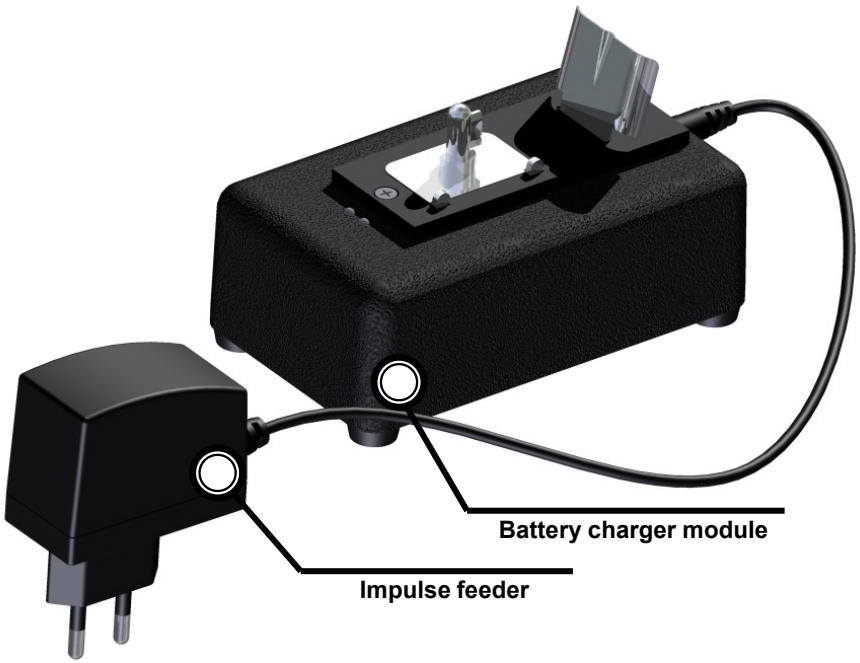

Operational use properties :

- microprocessor control of charging process
- full visual display of current working stage of charger
- measurement of actual battery voltage (omitting voltage drops at the connections and conductors)
- protection against battery overcharging
- display of charging circuit break
- display of low charging current
- display of power supply interruption
- protection against self-discharging and discharging of a battery by a microprocessor system (eg. by diode LED module) when the lamp is connected into charging circuit of a battery charger

FASER S.A.

The LU-5 charging unit

The LU-5 type universal charging unit is designed for maintenance free charging of miners cap lamps and signaling lamps (hydride, alkaline battery Ni-MH at a rated voltage of 3.6V) produced by FASER S.A. Depending on the programming version, the charging unit is for charging of LN-04, LN-IZA, and LS-04 cap lamps.
Modern charger clips placed on the frame structure afford the possibility for full control of the charging and discharging process by means of a microprocessor system. Microprocessors allow for fine control. Visual display LED's inform the user about the stage of operation. i.e. charging, lamp ready for use, defect.

Parameter / No	959 *06H
Application (designed to charge cap lamps type)	LN-IZA LN-04 LS-04
Number of charging stands	5
Supply voltage	AC 88-264 V 50/60 Hz
Consumption of power	max. 50 W
Type of charging	Constant current charging
Mass	max. 11,5 kg
Time of charging	max. 6h
Working temperature	-20 C ÷ +60 C
Overall dimensions (l x b x h)	672 x 200 x 336 mm
Allowable humidity	96%
Accordance with directives	2004/108/WE (Directive EMC)

Owing to the module design of charging unit LU-5 it is possible to combine sets for stations to charge greater number of lamps, for example 10, 15, 20 stations.

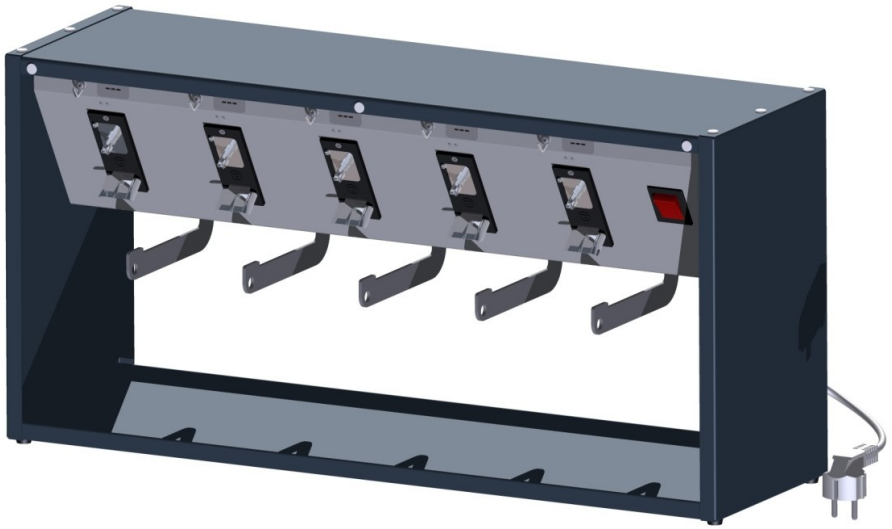

Operational use properties :

- microprocessor control of charging process
- full visual display of current working stage of charger
- measurement of actual battery voltage (omitting voltage drops at the connections and conductors)
- protection against battery overcharging
- display of charging circuit break
- display of low charging current
- display of power supply interruption
- protection against self-discharging and discharging of a battery by a microprocessor system (eg. by diode LED module) when the lamp is connected into charging circuit of a battery charger

FASER S.A.

Multiple-station charging units

Multiple-station charging units are designed for maintenance free charging of the lamps batteries produced by FASER S.A.

Charging units for cap lamp **LN-IZA** and signal lamp **LS-04**:

Parameter				
Number of charging station		51	102	136
Mass [kg] approx.		<73	<146	<182
Overall dimensions [mm]	length	1987	1987	1987
	depth	186	388	388
	height	1775	1435	1775
Range of working temperature		- 5 C +65 C		
Maximum permissible humidity		85%		

Technical data:

- **Supply**: single-phase AC 230 V/110 V
- **Frequency of supply network**: 50 Hz (47 63)
- **Direct current charging**
- Depending on the chargers used, charging units possess the followong features:
  - Discharging function
  - Possibility to work with computer-operated lamp room

FASER S.A.

Multiple-station charging units

- microprocessor control of charging and discharging process
- full visual display of current working stage of charger clip (with indication of charging stage termination of a battery – a large green diode)
- measurement of actual battery voltage (omitting voltage drops at the connections and conductors)
- protection against the battery overcharging (time limit)
- display of battery circuit break (charging break)
- display of device defect
- protection against complete self-discharging and discharging of a battery by a microprocessor system (by location transmitters and diode LED module) after the battery has been charged – the lamp is connected to charging circuit and the battery has been charged
- protection against the supply voltage drop (storage of present programmed stage in which the charger clip had been before the voltage decreased – when voltage restarts, charger clip passes automatically into maintenance mode, keeping the battery ready for use.
- the possibility of microprocessor control of the working stage of the charger clip or programming charging parameters by computer system (the RJ-12 seat terminals through the suitable ports placed at the back board of the charger clip, can be connected to a computer).

The Factory od Rescue Equipment and Miner's Lamps „FASER" S.A.
ul. Nakielska 42/44, 42-600 Tarnowskie Góry - POLAND
tel. +48 (32) 208 07 77; fax. +48 (32) 285 34 13
e-mail: faser@faser.com.pl http://www.faser.pl

Universal stretcher NU-1

Universal stretcher NU-1 is used to transport the injured person in horizontal and parallel position from the place where the accident took place to the place where the person is taken care by medical service. It can be used in underground mining means of transport and mining shafts when the fire has taken bottom floors, staircases etc.

Design: Frame and bearing plate of the stretcher is made of aluminum alloy which guarantees rigidity required due to the correct position of spine.

Bearing plate and bedhead are padded with foam rubber mattress and hemmed with one-side rubber fabric.

It contains springs equipped with circles that allow for moving the stretcher and partial mitigation of vibrations.

Head rest is used to position the head of the injured person during parallel transport so that the head does not dingle and the voice box is not compressed.

Belts are used as a protection so that the injured person does not slip down from the stretcher during horizontal and parallel transport. Footrest is used in parallel transport as a support for the injured person's legs.

Technical data

- Weight:
  - during parallel transport – 20kg
  - during horizontal transport – 15,5 kg
- Overall dimensions (length x width x height):
  - 1900 x 530 x 228 mm
- Track – 400 mm

Feser S.A.

Flameproof lamp type FLP-01

24 LED diodes constitute an efficient light source.
Due to a special lens the lamp lightens workplaces,
it neither blinds nor forms reflections.

- **The lamp is to be used in places where there is a possibility of methane and/or coal dust explosion.**
- **It is used to lighten walls, excavations, ditches, horizontal or inclined drifts used by pedestrians,**
  other workplaces and places where machines and devices are installed, means of communication and on longwall powered supports.
- **Small dimensions and low weight, a possibility to assemble in different positions which allow unlimited ways of assembly.**

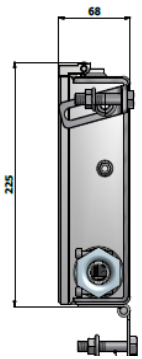

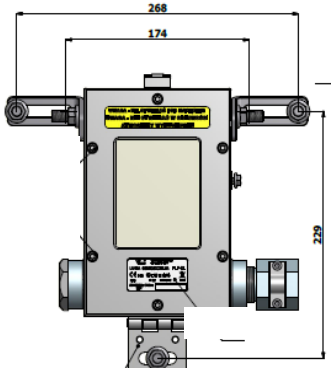

Fabryka Sprzętu Ratunkowego i Lamp Górniczych „FASER" S.A.
ul. Nakielska 42/44, 42-600 Tarnowskie Góry
tel. +48 (32) 208 07 77; fax. +48 (32) 285 34 13
e-mail: faser@faser.com.pl http://www.faser.pl

FASER S.A.

Flameproof lamp type FLP-01

Technical data

Item	Type of lampy / No / Parameter	FLP-01 969
1.	Rated voltage (range of rated voltage)	230 VAC (90 ÷ 264) VAC
2.	Power consumption from the mains/ power consumption	max 50 VA / max 30 W
3.	Light source	24 LED
4.	Light flux of light source	2200 lm
5.	Cable inlet	WKS/M32 g6/H6 PN ISO 965
6.	Flameproof plug	KZS/M32 g6/H6 PN ISO 965
7.	Maximum filament cut	4 mm^2
8.	Connecting clamps	WAGO 4 cable feeding block
9.	Load capacity of pass-through feeder ears	10 A
10.	Protection class	I
11.	Ambient temperature	-10°C ≤ Ta ≤ +40°C
12.	Relative humidity at temperature +35°C	up to 95%
13.	Protection degree according to PN-EN 60529	IP 64
14.	Mass	5,5 kg
15.	Dimensions	210mm x 140mm x 64mm
16.	Explosion-proof construction mark	I M2 Ex d I Mb
17.	EC-TYPE EXAMINATION CERTIFICATE	KDB 11ATEX074
18.	Conformity with directives: - 94/9/WE (Directive ATEX) - 2004/108/WE (Directive EMC)	

Fabryka Sprzętu Ratunkowego i Lamp Górniczych „FASER" S.A.
ul. Nakielska 42/44, 42-600 Tarnowskie Góry
tel. +48 (32) 208 07 77; fax. +48 (32) 285 34 13
e-mail: faser@faser.com.pl http://www.faser.pl

FASER S.A.

Flameproof lamp type FLP-01

How to assemble flameproof lamp type FLP-01

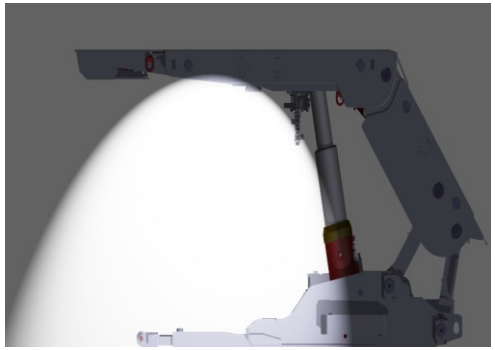

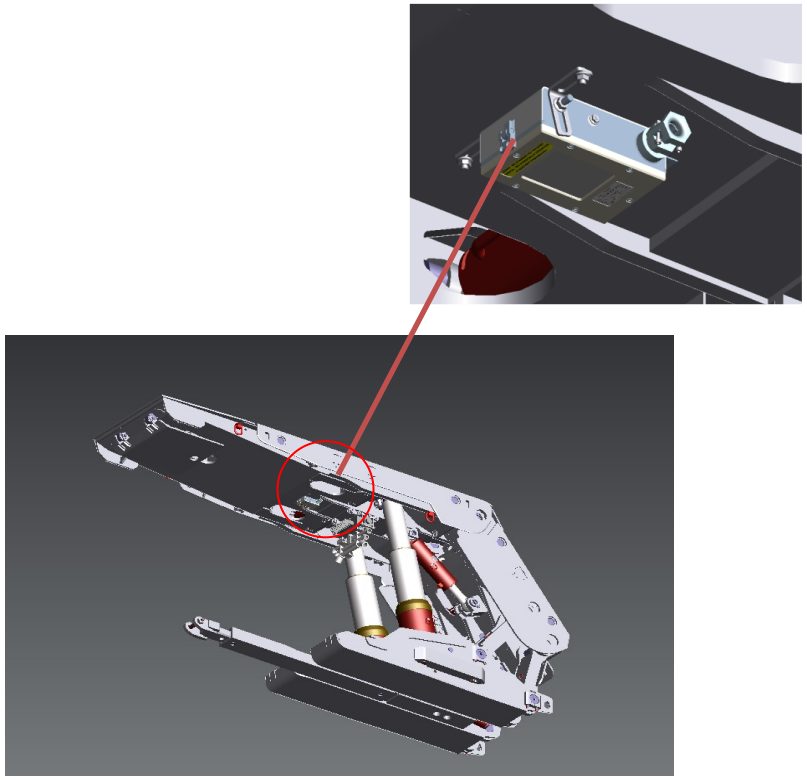

View of the fixed flameproof lamp type FLP-01 with longwall powered supports manufactured by „FAZOS”

Lamp serial assembly

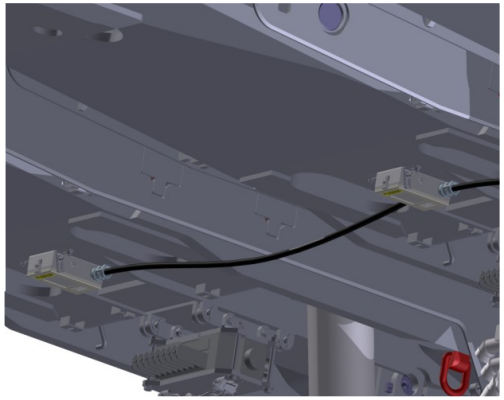

Lamp holders enable adjustment of luminosity angle

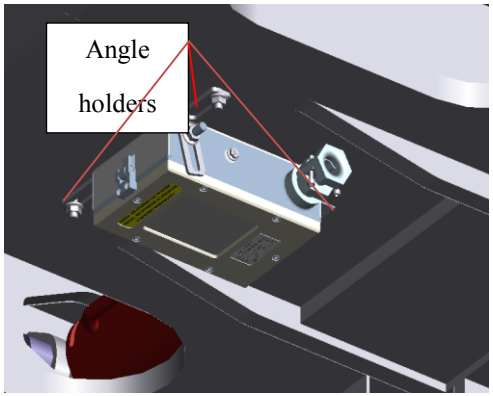

Fabryka Sprzętu Ratunkowego i Lamp Górniczych „FASER” S.A.
ul. Nakielska 42/44, 42-600 Tarnowskie Góry
tel. +48 (32) 208 07 77; fax. +48 (32) 285 34 13
e-mail: faser@faser.com.pl http://www.faser.pl

FASER S.A.

ATE-1 Type Evacuation Breathing Apparatus For Crews of Armored Vehicles

The ATE-1 chemical oxygen evacuation breathing apparatus is an individual apparatus for emergency escape from flooded armoured combat vehicles. It is designed for the respiratory protection of the user against harmful substances whilst evacuating the armoured vehicle. The apparatus allows its user to leave a submerged vehicle and breathe safely whilst traveling to the surface, breathe safely whilst on the surface of the water and swim to the shore.

On land the apparatus can also be used while escaping from other respiratory hazards, it is designed for use in circumstances where there is or may be oxygen deficiency or a build up of toxic gasses.

Technical data

- Breathing resistance (inhale & exhale) at the air flow of 35 l/min – max.1700 Pa
- Rated duration at the air flow of 35 l/min (on land & in water): 60 min
- Oxygen reserves of emergency container 8 dm^3
- Mass 5 kg
- Overall dimensions of folded apparatus 90 x 260 x 390 mm
- The ATE-1 evacuation apparatus has a certificate of conformity No 01/OCWAMW/10 issued by The NAVY ACADEMY in Gdynia, POLAND

Esser® S.A.

Filtration – ventilation device UFW-900 2C type

The filtration – ventilation device UFW-900 2C is designed for air filtration from toxic chemical compounds (in the form of gas, aerosol and smoke) radioactive dust and bactericides and supply stationary shelters another stationary facilities with breathable clean air. The device purifies the air from the following harmful substances:

- radioactive dust and neutral dust
- irritating smoke and neutral smoke
- toxic chemical compounds in the form of gas, aerosol and smoke and war gas

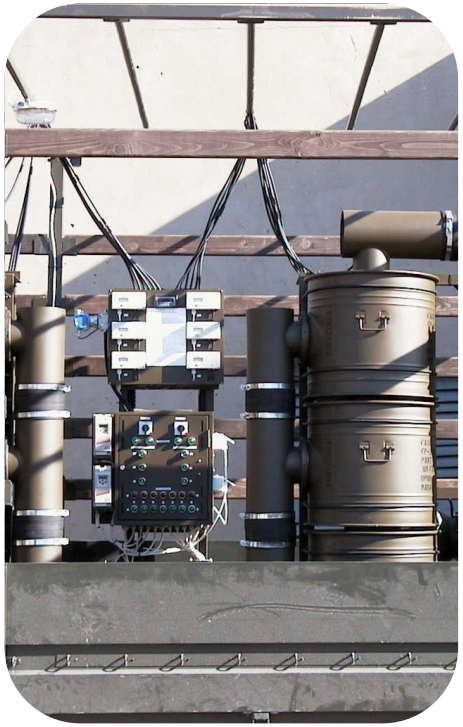

Technical data

- Rated output: 900 m^3/h in filtration-ventilation system
  >1000 m^3/h in ventilation system
- There are three degrees of air ventilation:
  - filter of rough dust removal (it stops dust and aerosol at the size of molecule above 2 μm)
  - pre-filter PF-1000 (it stops solid and liquid aerosol at the size of molecule above 1 μm)
  - the FP-300P combined filter (it stops aerosol residue and toxic chemical compounds (in the form of gas, aerosol and smoke)
- Effectiveness of filtration: 99,995%
- Self life of combined filter: 5 years from the production date
- Current supply: alternating current 400V

Veser S.A.

Filtration - Ventilation Device

The filtration - ventilation device when fitted with a combined filter (FPT-100M, FP-100N, FPT-200M, FP-300P) is designed for air filtration from toxic chemical compounds (in the form of gas, aerosol and smoke) radioactive dust and bactericides.

The filtration-ventilation device can be used in the field and stationary shelters, on vessels, in automotive vehicles, in track laying vehicles and another facilities where there is a need of breathable clean air.

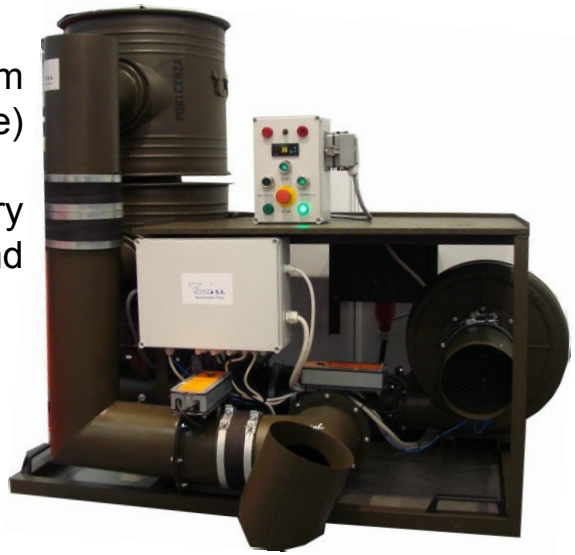

UFW-600-1C

- Stationary filtration-ventilation device
  - UFW-200-1C
  - UFW-300
  - UFW-600, UFW-600 SM, UFW-600-1C
  - UFW-900, UFW-900-1C, UFW-900-2C
  - UFW-1200- 1C

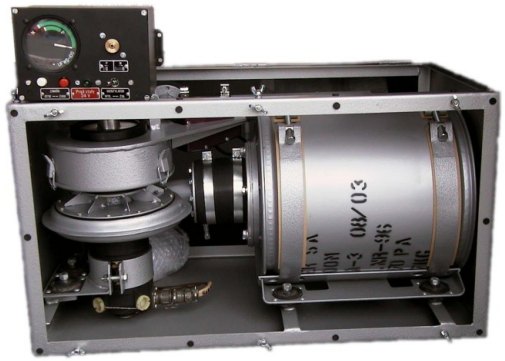

UFWS- 100z

- Mobile filtration - ventilation device
  - UFWS-75
  - UFWS-100z (outdoor)
  - UFWS-100W
  - FWU-100
  - FWU-200

Vesser S.A.

FPT – 100M/P Type Combined Filter

The FPT-100M/P combined filter is fixed to FWU-100type filtration-ventilation device and designed for air cleaning from toxic chemical compounds, radioactive dust and bactericides.

The FPT-100M/P combined filter when fixed into the filtration-ventilation device can be used in the field and stationary shelters, on vessels , in automotive vehicles, in track laying vehicles and another facilities where there is a need of breathable clean air.

Technical data

- Nominale rate of flow 100 m^3/h
- Initial resistance at nominal rate of flow max. 1275 Pa
- Effectiveness of filtration 99,995%
- Leak tightness degree at positive pressure of 2000 Pa for nominal rate of flow max. 0,5 l/min
- Mass max. max.12 kg
- absorbing capacity in accordance with WT-428 item 3.1.5. i 3.1.6.
- Environmental conditions (during operation) temperature -30 C ÷ +50 C

Vesser S.A.

FPT – 200M/P Type Combined Filter

The FPT-200M/P combined filter is fixed to FWU-200type filtration-ventilation device and designed for air cleaning from toxic chemical compounds, radioactive dust and bactericides.

The FPT-200M/P combined filter when fixed into the filtration-ventilation device can be used in the field and stationary shelters, on vessels , in automotive vehicles, in track laying vehicles and another facilities where there is a need of breathable clean air.

Technical data

- Nominale rate of flow — max. 200 m^3/h
- Initial resistance at nominal rate of flow — 1570 Pa
- Effectiveness of filtration — 99,995%
- Leak tightness degree at positive pressure of 2000 Pa for nominal rate of flow — max.1,0 l/min
- Mass max. — max.19 kg
- absorbing capacity in accordance with WT-428 item 3.1.5. i 3.1.6.
- Environmental conditions (during operation) temperature — -30 C ÷ +50 C

Fesser S.A.

FPT – 300P Type Combined Filter

The FP-300P combined filter is fixed to UFW-300 , UFW-600 , UFW-900 & UFW-600SM type filtration-ventilation device and designed for air cleaning from toxic chemical compounds, radioactive dust and bactericides.
The FP-300P combined filter when fixed into the filtration-ventilation device can be used in the stationary shelters and another stationary facilities where there is a need of breathable clean air.

Technical data

- Nominale rate of flow — max. 300 m^3/h
- Initial resistance at nominal rate of flow — 800 Pa
- Effectiveness of filtration — 99,995%
- Leak tightness degree at positive pressure of 2000 Pa for nominal rate of flow — max. 1,5 l/min
- Mass max. — max. 65 kg
- absorbing capacity in accordance with WT-428 item 3.1.5. i 3.1.6.
- Environmental conditions (during operation) temperature — -30 C ÷ +50 C

S.A.

FP-100N and FP-200N Type Combined Filters

	FP-100N	FP-200N
	The FP-100N combined filter is fixed to RM 200 & RM-300 type filtration -ventilation device and designed for air cleaning from toxic chemical compounds, radioactive dust and bactericides. The FP-100N combined filter when fixed into the filtration-ventilation device can be used in the stationary shelters and another stationary facilities where there is a need of breathable clean air.	The FP-200N combined filter is produced in the following versions : FP-200N , FP - 200Nm and FP - 200N/WII. It is fixed to UFWO-200, UFWO-400, UFWO-600 type filtration -ventilation device and designed for air cleaning from toxic chemical compounds, radioactive dust and bactericides. The FP-200N combined filter when fixed into the filtration-ventilation device can be used in the stationary shelters and another stationary facilities where there is a need of breathable clean air.
	Technical data	
Nominale rate of flow	max.100 m^3/h	max.200 m^3/h
Initial resistance at nominal rate of flow	650 Pa	1275 Pa
Effectiveness of filtration	99,995%	99,995%
Leak tightness degree at positive pressure of 2000 pa for nominal rate of flow	max.0,5 l/min	max.1,0 l/min
Mass max.	max.30 kg	max.32 kg
Environmental conditions (during operation) temperature	-30 C ÷ +50 C	-30 C ÷+50 C

Feser S.A.

Certyfikat zgodności Nr1/2012/OiB

OŚRODEK CERTYFIKACJI WYROBÓW
WOJSKOWEGO INSTYTUTU CHEMII I RADIOMETRII

Akredytacja OiB JC 9/MON/2011

CERTYFIKAT ZGODNOŚCI
Nr 1/2012/OiB

udzielony po przeprowadzeniu procesu certyfikacji wg systemu 5

Nazwa posiadacza certyfikatu:

FABRYKA SPRZĘTU RATUNKOWEGO I LAMP GÓRNICZYCH „FASER" S.A.

Nazwa i adres producenta:

FABRYKA SPRZĘTU RATUNKOWEGO I LAMP GÓRNICZYCH „FASER" S.A.
42-600 Tarnowskie Góry, ul. Nakielska 42/44

nazwa wyrobu: ***FILTROPOCHŁANIACZE***
FPT-100B; FPT-100M/P; FPT-200B; FPT-200M/P;
FPT-200R; FP-100N; FP-200N; FP-200N/WII; FP-300P

PKWiU: 29.23.14-10.90

Zgodnie ze sprawozdaniami badań wykonanych przez:
Nr D/13/2012 Laboratorium Badawcze Ochrony Dróg Oddechowych WIChiR JB 28/MON/2011
Nr D/16/2012 Laboratorium Badawcze Ochrony Dróg Oddechowych WIChiR JB 28/MON/2011
Nr D/21/2012 Laboratorium Badawcze Ochrony Dróg Oddechowych WIChiR JB 28/MON/2011
Nr 18/FP/2012 Fabrykę Sprzętu Ratunkowego i Lamp Górniczych „FASER" S.A.
Nr 21/FP/2012 Fabrykę Sprzętu Ratunkowego i Lamp Górniczych „FASER" S.A.

wyrób spełnia wyspecyfikowane w załączniku nr 1 do niniejszego certyfikatu, wymagania zawarte w Warunkach Technicznych **WT-428.** Załącznik nr 1 stanowi integralną część niniejszego certyfikatu.

Prawo do posługiwania się certyfikatem w okresie od 01.06.2012 r. do 31.05.2015 r. dotyczy wyrobów odpowiadających wymaganiom określonym powyżej i posiadających właściwości, jak egzemplarze przedstawione do badań.

KIEROWNIK OŚRODKA CERTYFIKACJI WYROBÓW
mgr Jolanta Brzyska

DYREKTOR WOJSKOWEGO INSTYTUTU CHEMII I RADIOMETRII
dr inż. Roman Jóźwik

Warszawa, dnia 1.06.2012 r.

OŚRODEK CERTYFIKACJI WYROBÓW
WOJSKOWEGO INSTYTUTU CHEMII I RADIOMETRII

Akredytacja OiB JC 9/MON/2011

ZAŁĄCZNIK Nr 1
DO CERTYFIKATU ZGODNOŚCI Nr 1/2012/OiB

SPECYFIKACJA WYMAGAŃ
na FILTROPOCHŁANIACZE

Lp.	Parametr	FPT-100B	FPT-100M/P	FPT-200B	FPT-200M/P	FPT-200R	FP-100N	FP-200N	FP-200N/WII	FP-300P
1.	Wydajność nominalna V_{nom} [m^3/h]	100	100	200	200	200	100	200	200	300
2.	Maksymalna masa [kg]	≤20	≤20	≤30	≤30	≤30	≤40	≤60	≤60	≤70
3.	Skuteczność filtracji [%]	≥99,995	≥99,995	≥99,995	≥99,995	≥99,995	≥99,995	≥99,995	≥99,995	≥99,995
4.	Szczelność [% V_{nom}]	≤0,03	≤0,03	≤0,03	≤0,03	≤0,03	≤0,03	≤0,03	≤0,03	≤0,03
5.	Maksymalny opór przepływu [Pa]	≤1600	≤1600	≤1600	≤1600	≤1600	≤800	≤1600	≤1600	≤900
6.	Minimalna pojemność sorpcyjna [g]: - chlorocyjanu - chloropikryny	 ≥50 ≥150	 ≥50 ≥150	 ≥100 ≥300	 ≥100 ≥300	 ≥100 ≥300	 ≥100 ≥330	 ≥100 ≥330	 ≥100 ≥330	 ≥300 ≥1000
7.	Desorpcja chloropikryny [mg/m^3]	≤ 5	≤ 5	≤ 5	≤ 5	≤ 5	≤ 5	≤ 5	≤ 5	≤ 5
8.	Odporność na wibracje	odporny	odporny	odporny	odporny	odporny	odporny	odporny	odporny	odporny
9.	Odporność na udary	odporny	odporny	odporny	odporny	odporny	odporny	odporny	odporny	odporny
10.	Odporność termiczna	odporny	odporny	odporny	odporny	odporny	odporny	odporny	odporny	odporny
11.	Wymiary pkt. 2.2 WT [mm]	zgodne	zgodne	zgodne	zgodne	zgodne	zgodne	zgodne	zgodne	zgodne

*Sposób wykonania badań jest zgodny z określonym w Warunkach Technicznych **WT-428**.*

KIEROWNIK OŚRODKA CERTYFIKACJI WYROBÓW
mgr Jolanta Brzyska

DYREKTOR WOJSKOWEGO INSTYTUTU CHEMII I RADIOMETRII
dr inż. Roman Jóźwik

Warszawa, dnia 1.06.2012 r.

FASER S.A.

Compressed air breathing apparatus SCBA ProffAir® APS/4 type2

CE 1437

Compressed air breathing apparatus APS/4 type is a respiratory protective device designed for work protection purposes, rescue operation, fire fighting work, on ships, used to guide endangered persons to safety zones from dangerous environment. Breathing apparatus is also for industrial applications. Apparatus enables the user to breathe in case of oxygen deficiency and in the presence of harmful substances at the optional concentration in ambient atmosphere unless aggressive chemicals affect destructively the unit or disturb its satisfactory operation.

Type of the apparatus:

Technical data Type	Time of protective functioning [min] Total[1)]	 Without reserve air	Overall dimensions height x width x thickness [mm]	Mass max. of apparatus filled with air and facemask about [kg]	Cylinder capacity/ diameter/ filling pressure [dm3/mm/MPa]	Air reserve in cylinder
APS/4N – 2040	65	55	600 x 280 x 230	from 9,8 to 11,3[2)]	6,8/157/30	2040
APS/4N – 1800	58	48	630 x 280 x 200	15,0	6/140/30	1800

[1)] at air consumption of 30 dm^3/min [2)] depending on the type of cylinder

- System of pressure reduction – two-stage system with separate reduction stages
- Reduced pressure – 0,67 ÷ 0,75 MPa
- Warning signal activation pressure – 5,5 0,5 MPa
- Certificate –WE/S/1509/2010

Esser® S.A.

Compressed air breathing apparatus SCBA ProffAir® APS/4 type2

Main components of the apparatus:

- A harness with carrying straps and a belt, pressure reducer, pressure gauge, medium pressure hose
- A positive pressure demand valve
- A positive pressure face mask MT791
- Cylinders with compressed air:
  - Composite cylinder 6,8 dm3/30MPa (APS/4-2040)
  - Steel cylinder 6 dm3/30MPa (APS/4-1800)

Basic features of the apparatus:

- Connections between hoses – quickrelease joints
- Connection between the full face mask and the deman quickrelase joint or thread M45X3
- Positive pressure panoramic masks with a good field of viewing
- Operation – a positive pressure version (N) or a negative pressure version (S)
- Possibility to use with gas tight suits
- Comply with the standard EN 137
- Ergonomic harness adapted for use with:
  - Composite cylinder 6,8 dm^3/30MPa (APS/4-2040)
  - Steel cylinder 6 dm^3/30MPa (APS/4-1800)

Air breathing apparatus SCBA ProffAir APS/4 type 1 is a respiratory protective device used in industry and designed for work protection purpose. Technical data is identical as for SCBA ProffAir APS/4 type 2. Certificate WE/S/1128/2008

Esser® S.A.

Compressed air breathing apparatus APS/3N-600 W

Self-contained open-circuit compressed air breathing apparatus **APS/3…-600** in connection with the fitted full-face mask is assigned to user's airways isolation when working or rescuing people from noxious substances contaminating (gases, vapours, dusts) atmosphere or atmosphere insufficient to breath (oxygen volume less than 17%). These apparatuses are not designed for diving. They allow breathing when there is the lack of oxygen and with presence in the surrounding atmosphere of harmful substances at any concentration if they do not affect destructively the parts of the apparatus and do not cause changes in its functioning. The apparatus does not protect against the possibility of poisoning through the skin. The apparatus can be used in temperatures from -30 C to +60 C. **The apparatus type APS/3…-600 described in the user's instruction, satisfy the requirements of the Directive of the Council 89/686/EEC and the harmonized standard EN 137.**

A positive pressure version

Type of the apparatus:

- APS/3N-600 W - a positive pressure version – positive pressure demand valve „ATX 600" / positive pressure face mask MT791 „Panorama Plus" FASER S.A.

- **EC Type – Examination Certificate WE/S/992/2007**

FASER S.A.

Full face mask MT 213/2 ”DANKA S”

CE 1437

Application

In connection with suitable equipment, full face mask MT 213/3 ”DANKA S” is designed to protect the user’s respiratory system. Moreover, it protects eyes and face against noxious substances.

Main features

- Panormamic visor with large field of vision
- Ease of speaking
- Inner mask which decreases the dead space
- Quick-relase and easy adjustable head harness
- Adequate sealing to the wearer’s face

Technical data

The thread of the connector	Rd 40 x 1/7”
Ambient temperature	-30 C ÷ +60 C
Mass	0,6 kg ^{0,02kg}
Class of the mask	3 (3CL)
EC Type – Examination Certificate	**WE/S/935/2007**
Size	universal size (M/L), suitable for a wide variety of head sizes and face shapes

Esser® S.A.

Full face mask MT 848 ”JADZIA”

CE 1437

In connection with suitable equipment, such as absorber filtering device, air breathing apparatus or hose breathing apparatus, full face mask MT 848 „JADZIA” is designed to protect the user’s respiratiory system.It also protects the user’s eyes and face against harmful substances. The exhaled air is removed outside through the exhalation valve

Main features

- Panormamic visor with large field of vision
- Ease of speaking
- Inner mask which decreases the dead space
- Quick-relase and easy adjustable head harness
- Adequate sealing on the face to the wearer’s face

Technical data

The thread of the connector	Rd 40 x 1/7”
Ambient temperature	-30 C ÷ +60 C
Mass	0,6 kg 0,02 kg
Complies with the standard	EN 136:1998 CL2
EC Type – Examination Certificate	**WE/S/1001/2007**
Class of the mask	2 (2CL)
Size	universal size (M/L), suitable for a wide variety of head sizes and face shapes

Esser® S.A.

Gas filters P21 type

CE 1437

Application

Gas filters P21 combined with the full face mask or half mask by means of breathing hose provide respiratory protection against harmful toxic vapors and gases, provided the content of harmful substance in the air does not exceed permissible concentration.

Technical data

- Overall dimensions (diameter x height) 116 x 95 mm
- Mass about 0,4 kg
- Breathing resistance at the continuous air flow of
  - 30 dm^3/min max. 1,4 mbar
  - 95 dm^3/min max. 5,6 mbar
- Thread of the connector Rd 40 x 1/7”
- Gas filters comply with the standard PN-EN 141:2002 (EN 141:2000)

Type of impurities	Type class	ET Test – Examination Certificate	Color	Allowable volume fraction
Organic gases and vapors for which boiling point is higher than 65 C	A2 typ 987	WE/S//1940/2012	brown	A2 – 0,5%
Inorganic gases and vapors except for carbon monoxide	P21/2 – B2	WE/S/426/2004	gray	B2 – 0,5%
Organic gases and vapors for which boiling point is higher than 65 C, inorganic gases and vapors except for carbon monoxide, sulfur dioxide and other acid gases and vapors, ammonia and organic derivative of ammonia	type 794 Gas filter A2B2E2K1	WE/S/424/2004	brown, gray, yellow, green	A2 – 0,5% B2 – 0,5% E2 – 0,5% K1 – 0,1%

Faser S.A.

Combined filter A2B2E2K1P2 type: 878

CE 1437

Application

Combined filter A2B2E2K1P2 is designed to provide respiratory protection when its user is performing short laboratory work or repairs during manufacturing processes. It is also used in case of failure of an industrial process requiring evacuation from the endangered area and in other situations demanding respiratory protection.

Combined filter A2B2E2K1P2 used with the full face mask Jadzia MT 848 protects the user's airways against the harmful gases and vapors when their concentration in the air does not exceed the below given values:

Organic gases and vapors for which boiling point is higher than 65 C, inorganic gases and vapors except for carbon monoxide, sulfur dioxide and other acid gases and vapors, ammonia and organic derivative of ammonia, particles	brown, gray, yellow, green, white	A2 – 0,5% B2 – 0,5% E2 – 0,5% K1 – 0,1% P2 class filter

Technical data

- Overall dimensions (height x diameter) 112 x 116 mm (0,5 mm)
- Weight about 0,42 kg
- Breathing resistance at the continuous air flow of
  - 30 dm^3/min max. 1,6 mbar
  - 95 dm^3/min max. 5,8 mbar
- Thread of the connector Rd 40 x 1/7”
- Shelf life 3 years
- EC Type- Examination Certificate **EC/S/720/2005**
- Complies with the standard PN-EN 141:2002 (EN 141:2000)

When the combined filter was used against one particular toxic substance (from those listed above), it must be used against this harmful substance until its end of usage. This combined filter must be used together with the full face mask having the connection Rd 40x1/7". Respiratory protection is provided on condition that the combined filter is used with the full face mask.

It is forbidden to use the combined filter in containers, boilers, tanks, silo wells, tunnels, closed rooms of small cubic capacity without natural ventilation where the oxygen content is lower than 17% by vol.

Faser S.A.

Carbon monoxide (CO) absorber 804 type

CE 1437

Application

Carbon monoxide absorber is designed for short laboratory work, repairs during man-made interference of manufacturing processes as well as in case of emergency. The absorber protects against carbon monoxide when concentration at the absorber inlet is not bigger than 1% by vol. Exceeding the concentration value (up to 2%) is admissible at short times. Protection period may be longer than 210 minutes depending on CO concentration and humidity content. The absorber is not to be used when due to the absorbed humidity its mass increases about 200g.

It is forbidden to use the absorber in containers, boilers, tanks, silo wells, tunnels as well as closed spaces at small cubic capacity without natural ventilation when oxygen content is lower then 17% by vol. and CO content exceeds admissible value.

Technical data

▪ Overall dimensions	256 x 140 x 70 mm
▪ Mass	1,8 kg
▪ Breathing resistance at the continuous air flow of	
▪ 30 dm^3/min	max. 1,6 mbar
▪ 95 dm^3/min	max. 5,8 mbar
▪ Thread of absorber	Rd 40 x 1/7”
▪ Rated duration	min. 210 min
▪ Shelf life	4 years 6 months
▪ EC Type- Examination Certificate	**WE/S/393/2005**

Main features

- Reusable
- It has a resistance layer indicating degree of use by the increase of inhalation resistance to 2000Pa
- In case of lower humidity, protection period might be longer
- It is carried on a belt carrier or on the back

CO absrober enters into composition of the following set:
carrier, full face mask, breathing hose

Esser S.A.

Gas detector WG-2M type

Application

Detector of gases WG-2M is assigned to detect and determine the percent capacity of CO, CO_2, H_2S or other gases in the air, relatively to tubular detector used. Detector WG-2M is applied in mining, gas engineering, chemical industry and others, for example in the leak tightness pipelines and fire dams examination.

Construction

Detector of gases WG-2M consists of bellows-pump, interior package, cover pack and 20-pieces of CO tubular detectors set.

Technical data

- Pump capacity (one suction): 0,1 dm^3
- Dimension of cover pack: 170x40x60 mm
- Weight of WG-2M set: nearly 1,3 kg
- WG-2M detector is made according to PN Polish Standard.

Tubular detectors of gases

Application: Tubular detectors of gases are applied for quick detection and determination of the percent capacity of gases (CO, CO_2, H_2) in the air. Tubular detector of air movements is fume detector type - when used with rubber bullet it faciliates leak tightness examination of ventilation stopping and pipelines by the means of smoke emission.

Construction: Tubular detectors are made as glass pipes with suitable indicator mass filled inside. The ends of pipe are fire finished just after filling. On CO, CO_2, H_2 detectors pipe there is a scale, feature of detected gas and direction of gasflow (suction) are drafted.

Technical data

Detector modification marking	Indications range in % (of volumne) at		Indicator mass colouring
	one suction	10th suction	
CO - 0,002%	0,5	0,5	to green
CO - 0,01%	3	0,3	to green
CO_2 - 0,5%	5	-	to violet
CO_2 - 1%	18	-	to violet
H_2S 0,0007%	0,7	0,0007	to brown

Accuracy of gas reading:	+/- 25%
Temperature in use:	0 C ÷ 40 C
Weight of 20 pieces set:	nearly 0,1 kg
Dimensions ø:	7,3 x 134 mm

Tubular detectors are made according to PN-78/Z-08002 Polish Standard

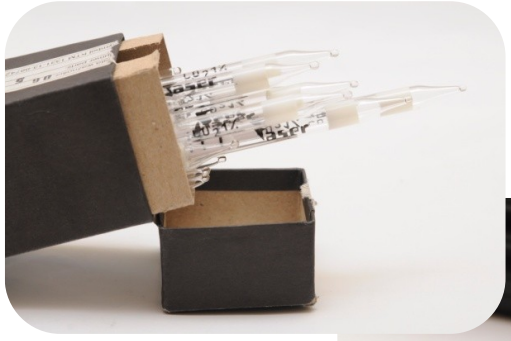

Vesser S.A.

Universal instrument for breathing apparatus control PK-9M type and PK-11M type

Application:

Universal instrument for breathing apparatus control PK-9M type is also to control designed self-contained closed-circuit oxygen breathing apparatus; while control instruments give a possibility to check correct functioning of apparatus by carrying out a test of the following parameters:

- leak tightness control
- extraction pressure measurement of relief valve
- operating negative pressure measurement of demand valve
- oxygen supply measurement (PK-9M)

1) - self-contained closed-circuit oxygen breathing apparatus
2) - self-contained open-circuit compressed air breathing apparatus

Technical data:

PARAMETER		INSTRUMENT TYPE PK-9M	INSTRUMENT TYPE PK-11M	UNIT
Application (control)		**1) 2)**	**2)**	
Stroke capacity of the pump at two-sided operation (total)		0,5 0,02	0,5 0,02	dm^3
Range of indication for:	positive pressure	0 ÷ +1000	0 ÷ +1000	Pa
	negative pressure	0 ÷ -1000	0 ÷ -1000	Pa
	1-st flow	0,2 ÷ 2	-----	dm^3/min
	2-nd flow	2 ÷ 5	-----	dm^3/min
Overall dimensions		560 x 290 x 240		mm
Mass		ok. 12,5		kg

Maintenance conditions:

Only people who are precisely instructed in accordance with „Instructions for use" of the Universal Instrument for breathing apparatus control can use these instruments. Detailed information about operating and maintenance are enclosed in Instructions for use of PK-9M nad PK-11M Universal instrument fo breathing apparatus control.

Esser S.A.

Auxiliary set for face seal control ZP-2 type

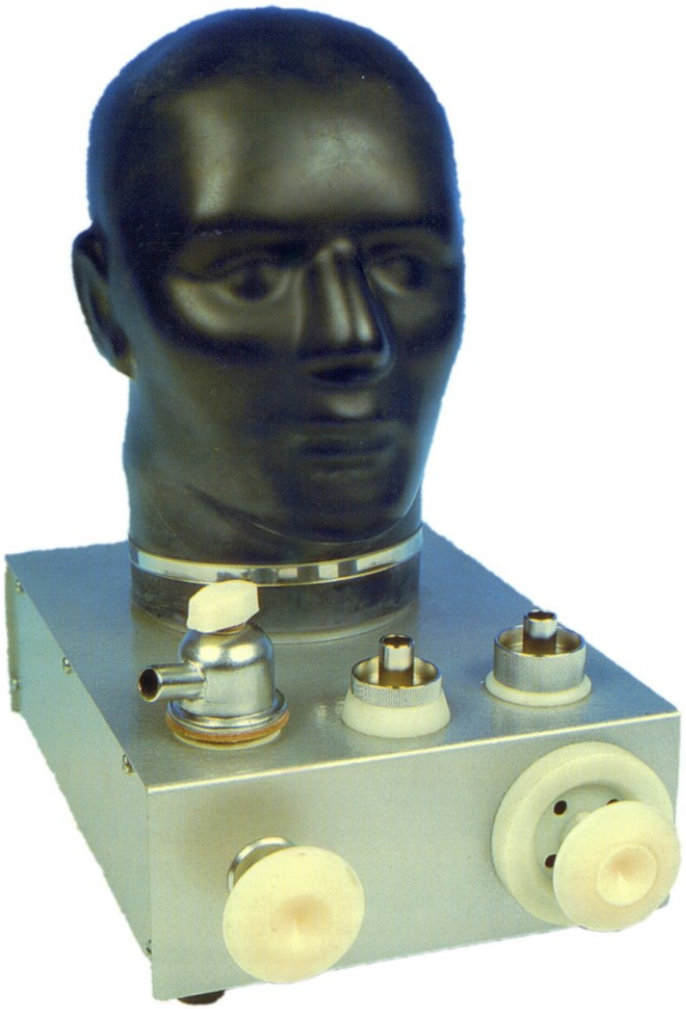

Auxiliary set for face seal control ZP-2 type is to be used together with universal instrument PK-9 and Pk-9M type. Full face masks fitted with self-contained closed-circuit oxygen breathing apparaturs with 5/16" centre thread connection and full face masks fitted with self-contained closed-circuit oxygen breathing apparaturs for escape AU-9E can by tested.

The auxiliary set is additionally equipped with a connector in order to check the speech diophragm of MT 313/3 "ANKA" full face mask in term of leak tightness. The set consists of base, rubber, head, bellows, relieve valve and 3 connectors. There is a possibility to fix the unit to the table through the holes in the base. The location of the unit should facilitate putting and taking off the mask and it faciliates operating the unit.